HEATSTAKING HANDGUN PENCIL

The PAS Heatstaking Handgun is a hand-operated tool designed for low volume production runs and lab testing. Uses include the installation of threaded inserts, heatstaking of thermoplastic posts, embossing, date coding, swaging, and film and fabric sealing.

STANDARD FEATURES

- **Micro-processor based temperature control**
- **Quick tooling change over**
- **1 year warranty**
- **Insulated aluminum handle**
- **Built in post-cooling with thumb actuation**
- **Operating range 80-800 °F**

PAS 19 SARGENT DRIVE BETHANY, CT 06524 F: 203-393-0395 P: 203-393-0639 SALES@HEATSTAKING.COM
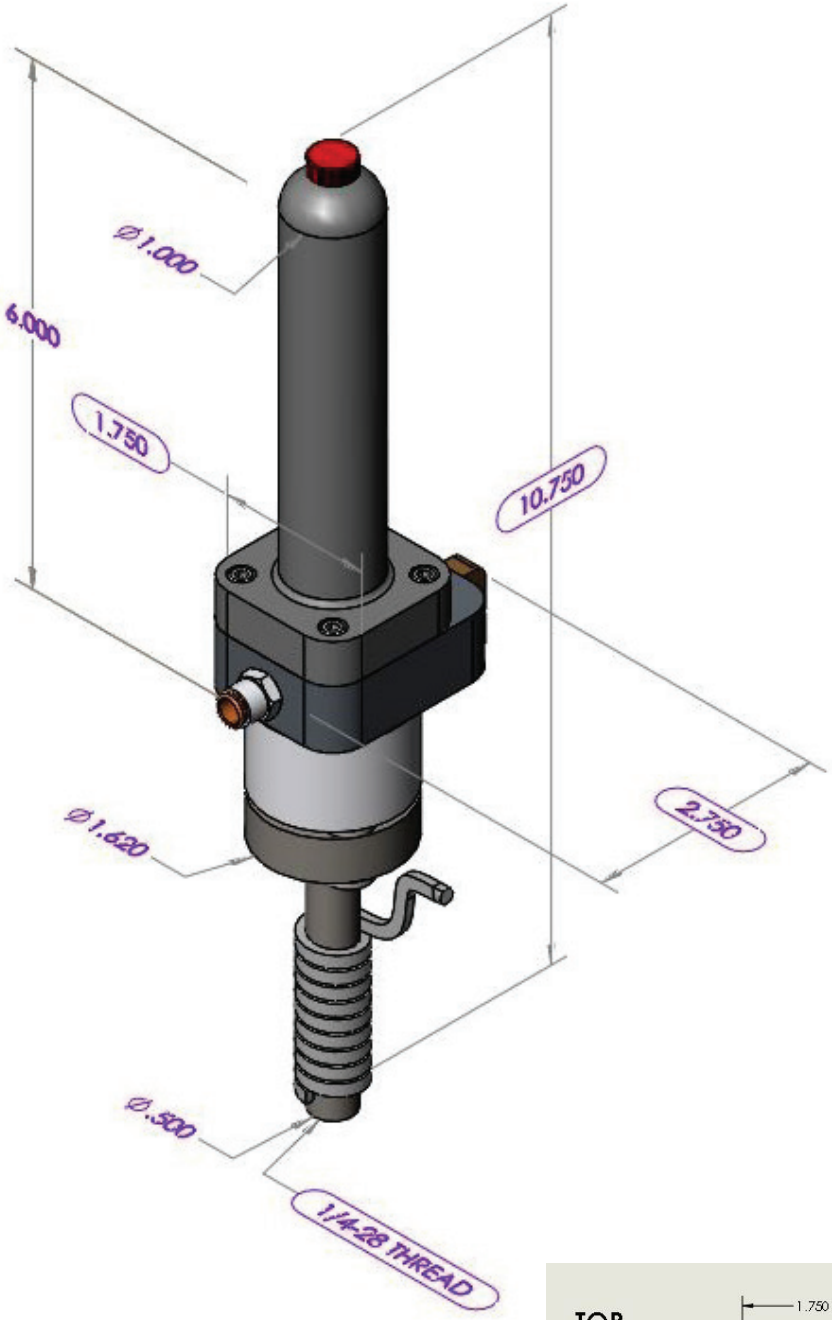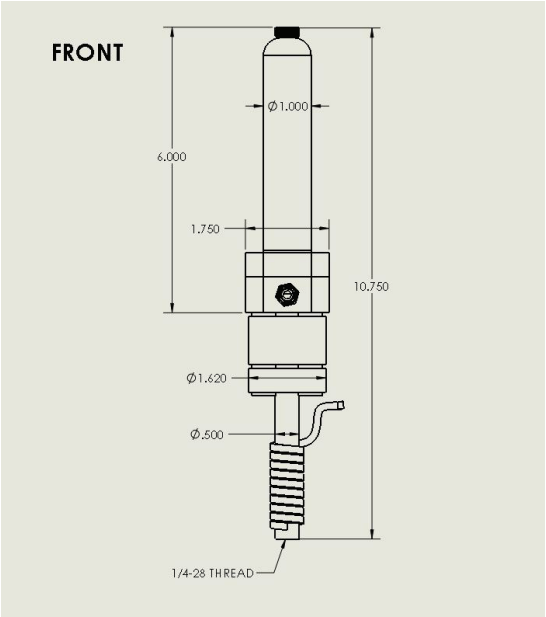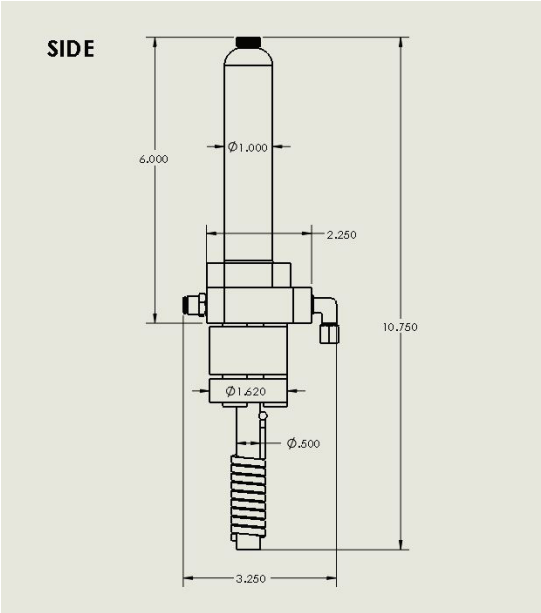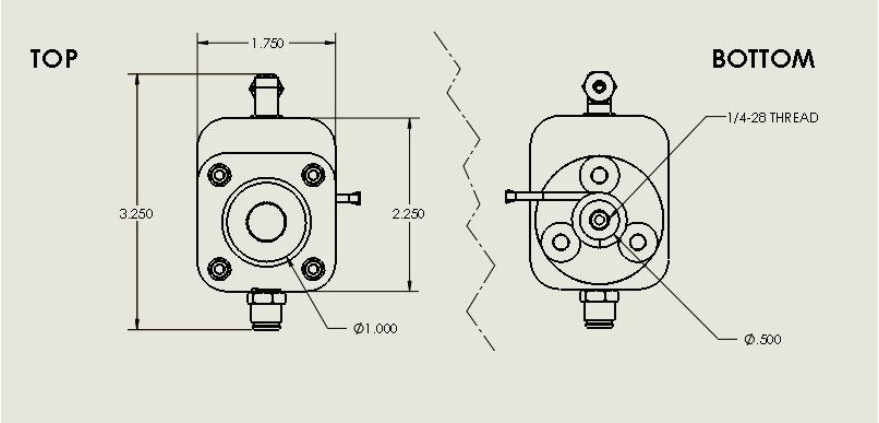
SPECIFICATIONS